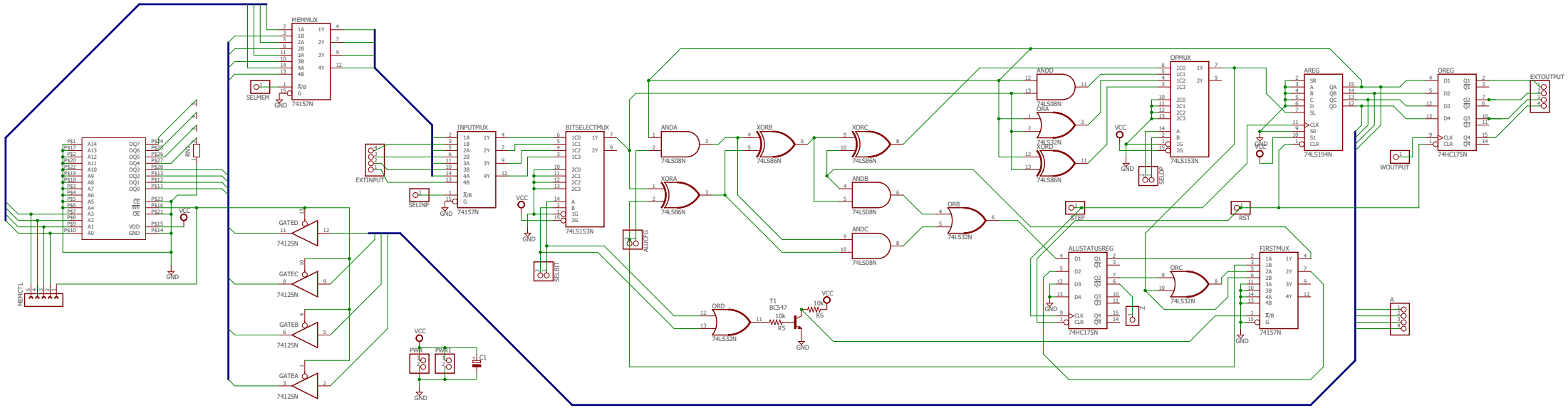
MEMMUX
74157N
SELMEM
GND
EXTINPUT
INPUTMUX
74157N
SELINP
BITSELECTMUX
74LS153N
SELBIT
ALUCFG
ANDA
74LS08N
XORA
74LS86N
XORB
74LS86N
XORC
74LS86N
ANDB
74LS08N
ANDC
74LS08N
ORB
74LS32N
ORD
74LS32N
T1
BC547
10k
R5
10k
R6
ANDD
74LS08N
ORA
74LS32N
XORD
74LS86N
OPMUX
74LS153N
SELOP
AREG
74LS194N
OREG
74HC175N
EXTOUTPUT
WOUTPUT
STEP
RST
ALUSTATUSREG
74HC175N
ORC
74LS32N
FIRSTMUX
74157N
A
GATED
GATEC
GATEB
GATEA
74125N
PWR
PWR1
C1
VCC
MEMCTL
RN1