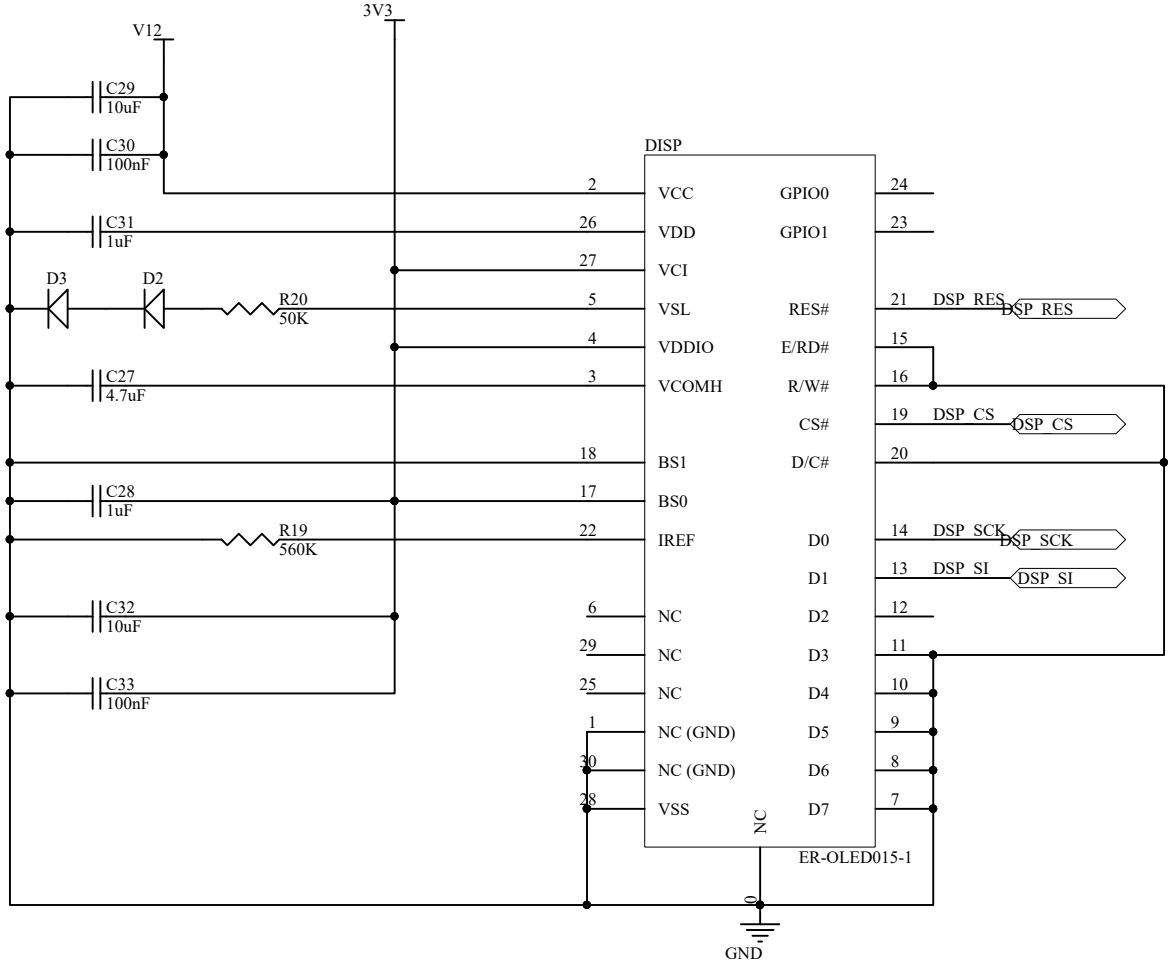
3V3
V12
C29
10uF
C30
100nF
C31
1uF
D3
D2
R20
50K
C27
4.7uF
C28
1uF
R19
560K
C32
10uF
C33
100nF
DISP
2 VCC
26 VDD
27 VCI
5 VSL
4 VDDIO
3 VCOMH
18 BS1
17 BS0
22 IREF
6 NC
29 NC
25 NC
1 NC (GND)
30 NC (GND)
28 VSS
GPIO0 24
GPIO1 23
RES# 21 DSP_RES
E/RD# 15
R/W# 16
CS# 19 DSP_CS
D/C# 20
D0 14 DSP_SCK
D1 13 DSP_SI
D2 12
D3 11
D4 10
D5 9
D6 8
D7 7
NC
ER-OLED015-1
GND