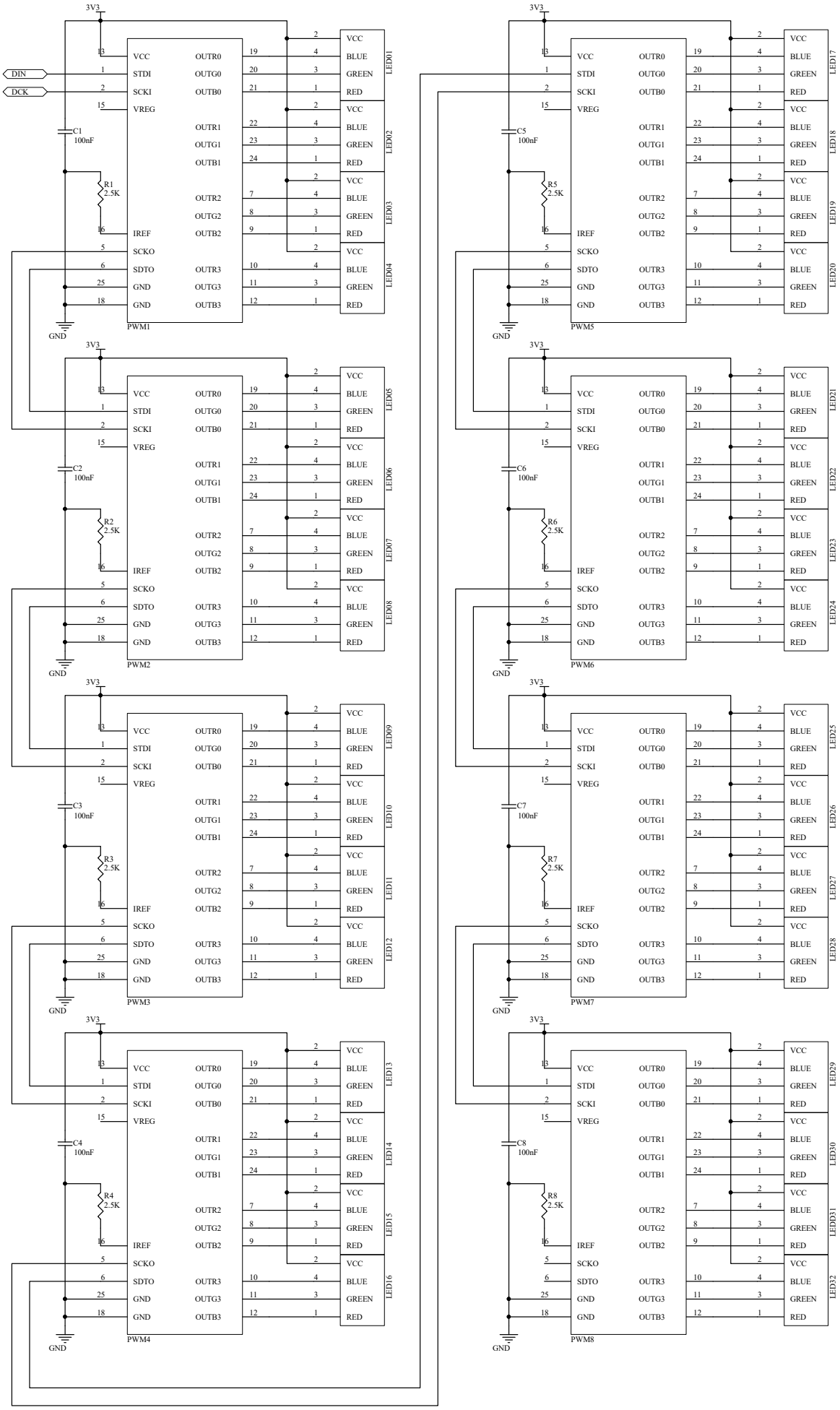
3V3
DIN
DCK
C1
100nF
R1
2.5K
GND
PWM1
LED01
LED02
LED03
LED04
C2
100nF
R2
2.5K
PWM2
LED05
LED06
LED07
LED08
C3
100nF
R3
2.5K
PWM3
LED09
LED10
LED11
LED12
C4
100nF
R4
2.5K
PWM4
LED13
LED14
LED15
LED16
C5
100nF
R5
2.5K
PWM5
LED17
LED18
LED19
LED20
C6
100nF
R6
2.5K
PWM6
LED21
LED22
LED23
LED24
C7
100nF
R7
2.5K
PWM7
LED25
LED26
LED27
LED28
C8
100nF
R8
2.5K
PWM8
LED29
LED30
LED31
LED32
VCC
STDI
SCKI
VREG
IREF
SCKO
SDTO
GND
OUTR0
OUTG0
OUTB0
OUTR1
OUTG1
OUTB1
OUTR2
OUTG2
OUTB2
OUTR3
OUTG3
OUTB3
BLUE
GREEN
RED